Verilog code for Arithmetic Logic Unit (ALU)

Last time, an Arithmetic Logic Unit (ALU) is designed and implemented in VHDL. Full VHDL code for the ALU was presented.

Today, fpga4student presents the Verilog code for the ALU. The testbench Verilog code for the ALU is also provided for simulation.

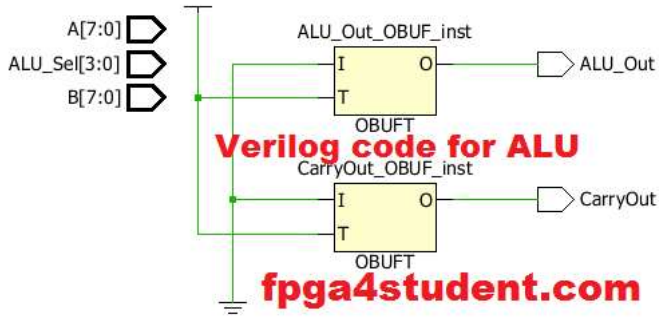

Verilog code for the ALU:

```
/* ALU Arithmetic and Logic Operations
-----------------------------------------------------------------
|ALU_Sel|   ALU Operation
-----------------------------------------------------------------
| 0000  |   ALU_Out = A + B;
-----------------------------------------------------------------
| 0001  |   ALU_Out = A - B;
-----------------------------------------------------------------
| 0010  |   ALU_Out = A * B;
-----------------------------------------------------------------
| 0011  |   ALU_Out = A / B;
-----------------------------------------------------------------
| 0100  |   ALU_Out = A << 1;
-----------------------------------------------------------------
| 0101  |   ALU_Out = A >> 1;
-----------------------------------------------------------------
| 0110  |   ALU_Out = A rotated left by 1;
-----------------------------------------------------------------
| 0111  |   ALU_Out = A rotated right by 1;
-----------------------------------------------------------------
| 1000  |   ALU_Out = A and B;
-----------------------------------------------------------------
| 1001  |   ALU_Out = A or B;
-----------------------------------------------------------------
| 1010  |   ALU_Out = A xor B;
-----------------------------------------------------------------
| 1011  |   ALU_Out = A nor B;
-----------------------------------------------------------------
| 1100  |   ALU_Out = A nand B;
-----------------------------------------------------------------
| 1101  |   ALU_Out = A xnor B;
-----------------------------------------------------------------
| 1110  |   ALU_Out = 1 if A>B else 0;
-----------------------------------------------------------------
| 1111  |   ALU_Out = 1 if A=B else 0;
-----------------------------------------------------------------*/
// fpga4student.com: FPGA projects, Verilog projects, VHDL projects
// Verilog project: Verilog code for ALU
// by FPGA4STUDENT
module alu(
```

```
            input [7:0] A,B,  // ALU 8-bit Inputs
            input [3:0] ALU_Sel,// ALU Selection
            output [7:0] ALU_Out, // ALU 8-bit Output
            output CarryOut // Carry Out Flag
    );
    reg [7:0] ALU_Result;
    wire [8:0] tmp;
    assign ALU_Out = ALU_Result; // ALU out
    assign tmp = {1'b0,A} + {1'b0,B};
    assign CarryOut = tmp[8]; // Carryout flag
    always @(*)
    begin
        case(ALU_Sel)
        4'b0000: // Addition
           ALU_Result = A + B ;
        4'b0001: // Subtraction
           ALU_Result = A - B ;
        4'b0010: // Multiplication
           ALU_Result = A * B;
        4'b0011: // Division
           ALU_Result = A/B;
        4'b0100: // Logical shift left
           ALU_Result = A<<1;
         4'b0101: // Logical shift right
           ALU_Result = A>>1;
         4'b0110: // Rotate left
           ALU_Result = {A[6:0],A[7]};
         4'b0111: // Rotate right
           ALU_Result = {A[0],A[7:1]};
          4'b1000: //  Logical and
           ALU_Result = A & B;
          4'b1001: //  Logical or
           ALU_Result = A | B;
          4'b1010: //  Logical xor
           ALU_Result = A ^ B;
          4'b1011: //  Logical nor
           ALU_Result = ~(A | B);
          4'b1100: // Logical nand
           ALU_Result = ~(A & B);
          4'b1101: // Logical xnor
           ALU_Result = ~(A ^ B);
          4'b1110: // Greater comparison
           ALU_Result = (A>B)?8'd1:8'd0 ;
          4'b1111: // Equal comparison
            ALU_Result = (A==B)?8'd1:8'd0 ;
          default: ALU_Result = A + B ;
        endcase
    end

endmodule
```

Testbench Verilog code for the ALU:

```
// fpga4student.com: FPGA projects, Verilog projects, VHDL projects
// Verilog project: Verilog code for ALU
// by FPGA4STUDENT
 `timescale 1ns / 1ps

module tb_alu;
//Inputs
 reg[7:0] A,B;
 reg[3:0] ALU_Sel;

//Outputs
 wire[7:0] ALU_Out;
```

```
 wire CarryOut;
 // Verilog code for ALU
 integer i;
 alu test_unit(
            A,B,  // ALU 8-bit Inputs
            ALU_Sel,// ALU Selection
            ALU_Out, // ALU 8-bit Output
            CarryOut // Carry Out Flag
     );
    initial begin
    // hold reset state for 100 ns.
      A = 8'h0A;
      B = 4'h02;
      ALU_Sel = 4'h0;

      for (i=0;i<=15;i=i+1)
      begin
       ALU_Sel = ALU_Sel + 8'h01;
       #10;
      end;

      A = 8'hF6;
      B = 8'h0A;

    end
endmodule
```

Simulation waveform for the ALU:

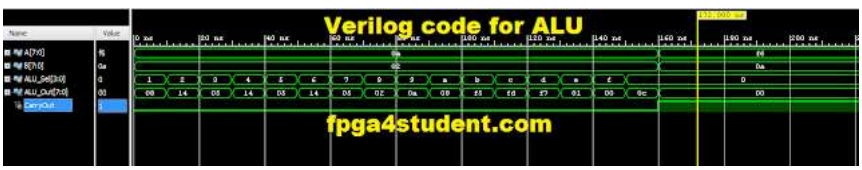

Recommended Verilog projects:

1. **What is an FPGA? How Verilog works on FPGA**
2. Verilog code for FIFO memory
3. Verilog code for 16-bit single-cycle MIPS processor
4. Programmable Digital Delay Timer in Verilog HDL
5. Verilog code for basic logic components in digital circuits
6. Verilog code for 32-bit Unsigned Divider
7. Verilog code for Fixed-Point Matrix Multiplication
8. Plate License Recognition in Verilog HDL
9. Verilog code for Carry-Look-Ahead Multiplier
10. Verilog code for a Microcontroller
11. Verilog code for 4x4 Multiplier
12. Verilog code for Car Parking System
13. Image processing on FPGA using Verilog HDL
14. How to load a text file into FPGA using Verilog HDL
15. Verilog code for Traffic Light Controller
16. Verilog code for Alarm Clock on FPGA
17. Verilog code for comparator design
18. Verilog code for D Flip Flop
19. Verilog code for Full Adder
20. Verilog code for counter with testbench
21. Verilog code for 16-bit RISC Processor
22. Verilog code for button debouncing on FPGA
23. How to write Verilog Testbench for bidirectional/ inout ports
24. Tic Tac Toe Game in Verilog and LogiSim
25. 32-bit 5-stage Pipelined MIPS Processor in Verilog (Part-1)

26. 32-bit 5-stage Pipelined MIPS Processor in Verilog (Part-2)
27. 32-bit 5-stage Pipelined MIPS Processor in Verilog (Part-3)
28. Verilog code for Decoder
29. Verilog code for Multiplexers
30. N-bit Adder Design in Verilog
31. Verilog vs VHDL: Explain by Examples
32. Verilog code for Clock divider on FPGA
33. How to generate a clock enable signal in Verilog
34. Verilog code for PWM Generator
35. Verilog coding vs Software Programming
36. Verilog code for Moore FSM Sequence Detector
37. Verilog code for 7-segment display controller on Basys 3 FPGA

DMCA PROTECTED

Privacy Policy | Disclaimer | Sitemap | Contact | Advertise Here
Copyright © 2016-2020 FPGA4student.com All Rights Reserved.